Journal of Ceramic Processing Research. Vol. 18, No. 8, pp. 599~603 (2017)

JOURNAL OF
Ceramic Processing Research

High-temperature Sliding Wear Properties of Graphite-Fe_3Al Composites

Yong-In Kim[a], Gye Seok An[a,c], Jin Man Jan[b], WonSik Lee[b], Bong-Geun Park[a], Hyung-Bin Park[a], YooJin Kim[c], Jung-Ju Lee[d], Se-Hyun Ko[b,*] and Sung-Churl Choi[a,*]

[a]*Division of Materials Science and Engineering, Hanyang University, 222 Wangsimni-ro, Seongdong-gu, Seoul 04763, Korea*
[b]*Advanced Process and Materials Group, Korea Institute of Industrial Technology(KITECH) 156 Gaetbeol-ro, Yeonsu-gu, Incheon 21999 Korea*
[c]*Engineering Ceramic Center, Korea Institute of Ceramic Engineering & Technology, 3321 Gyeongchung-daero, Sindun-myeon, Icheon 17303, Korea*
[d]*School of Materials Science and Engineering, Kyungpook National University, 80 Daehakro, Bukgu, Daegu 41533, Korea*

Sliding wear properties of graphite-Fe_3Al composites were investigated for their applications in the manufacture of sintered bearings capable of withstanding high temperatures and loads. The sliding wear properties of the composites were measured at a high temperature according to the change of graphite content, which added as a solid lubricant. With increase in the graphite content, the sliding wear properties improved; however, when the graphite content exceeded 12 wt%, the sliding wear properties were deteriorated. Analysis by scanning electron microscopy and X-ray diffraction confirmed that graphite and Fe_3Al formed a $Fe_3AlC_{0.5}$ phase by partial reaction with the matrix. The reaction dominated with increase of the graphite content. In addition, the $Fe_3AlC_{0.5}$ phase was also formed during wear test and was act as debris, causing deterioration of the sliding wear properties.

Key words: Graphite, Wear, $Fe_3AlC_{0.5}$, High temperature, Sintered bearing.

Introduction

Among the intermetallics, iron aluminides are good candidates for structural applications at high temperatures because they show good mechanical properties up to high temperatures and excellent resistance to high temperature oxidation. It has also been reported that Fe-35at%Al has a good wear properties [1-3]. The iron aluminides have been manufactured by a number of processing methods, such as casting and mechanical alloying.

Graphite is an excellent solid lubricant with lamellar structure. The crystal lattice of graphite consists of hexagonal rings forming thin parallel planes (graphene). Each carbon atom is covalently bonded to three other atoms in the plate (the angle between two bonds is 120°). The graphenes are bonded to each other by weak Van der Waals forces [4].

Powder metallurgy (PM) processing has advantages to apply the fields of automobile and other industrial machines because of economical and technical reasons [5]. Also, PM processing can achieve the great alloying possibility, which can give good mechanical and tribological properties. Self-lubricating materials reinforced by lubrication phases, such as graphite and MoS_2 et al., can be adapted to many sliding parts of machines [6]. The performance of self-lubricating bearings made by powder metallurgy is dependent on a combination of many factors, such as mechanical properties of matrix and lubricant materials, density, surface finish, applied load and speed [7]. A self-lubricating sintered bearing can be applied to sliding parts without the supply of additional lubricant. Due to these advantages, sintered bearings can be applied to parts requiring durability in extreme environments involving high temperatures, high loads, corrosion, and oxidation [8]. Thus, it is necessary to develop materials that exhibit good wear properties at high temperatures, such as low friction coefficient, high seizure resistance, high load-carrying capacity, good fatigue and corrosion resistance.

Combination of iron aluminide and graphite can be expected to show good wear properties at an environment of high temperature and high load. In this study, the manufacture process and wear properties of graphite-Fe_3Al composites have been studied to assess their potential as a sliding friction material at high temperatures.

Experimental Procedure

Powders of Fe (High-pure chemicals, 5-10 μm in diameter, 99.9% purity) and Al (High-pure chemicals, 3 μm in diameter, 99.9% purity) were used for preparing Fe-35 at% Al powders by mechanical alloying in an

*Corresponding author:
Tel : +82-2-2220-0505, 82-32-850-0219
Fax: +82-2-2291-6767, 82-32-850-0430
E-mail: choi0505@hanyang.ac.kr, shko@kitech.re.kr

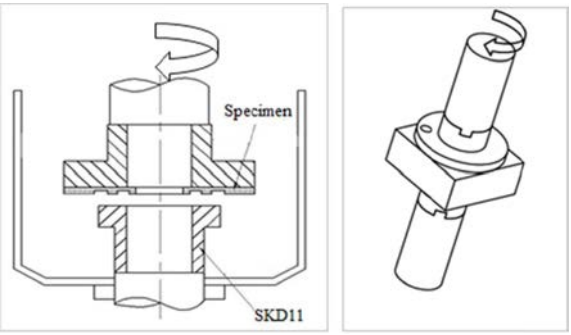

Fig. 1. Schematic diagram illustrating the sliding wear test.

attrition mill for 48 h. Graphite (Timrex KS 150, 63 μm in size) was added as the solid lubricant. The alloy powders and graphite were mixed for 30 min in a Turbular mixer. During the hot pressing, the samples were heated to 1100 °C in a vacuum at a rate of 10 °C/min, followed by pressing at 50 MPa for 30 min. The sintered samples were then furnace-cooled to room temperature in the vacuum.

Identification of the phases in the sintered samples was performed by X-ray diffraction (D8, Broker, Germany). The microstructures of the sintered samples were characterized by a scanning electron microscope equipped with an energy dispersive X-ray spectrometer (Nova SEM, FEI, USA). The hardness of the sintered samples was measured using a Rockwell hardness tester (HM-21, Mitutoyo, Japan).

The relationship of frictional force f, normal force N, and friction coefficient μ can be expressed as an equation $f = \mu N$. Hear, the friction coefficient depends on the test environment, test load, etc [9]. In order to determine the wear properties for the sintered samples, the friction load and temperature were set constant as 2.45 MPa and 400 °C, respectively. In the wear tests, tool steel of SKD 61 was used as the counterpart to sintered samples. As shown in Fig. 1, the sintered sample was repeatedly rotated by 45 ° at a speed of 1.2 m/min for 4 h.

Results and Discussion

Table 1 shows the densities of the composites after sintering. The relative densities were high and exceeded 97% for all the samples.

Fig. 2 shows the microstructure of the sintered samples as a function of the graphite content. The graphite particles homogeneously distributed in the matrix at all compositions. However, the fracture of the graphite particles was observed in the composite with 20 wt% graphite as seen in Fig. 2(d), which was damaged during surface polishing.

Fig. 3 shows the Rockwell hardness as a function of the graphite content. The mechanical properties of composites depended on the volume fractions of the constituting phases. The relationship between the volume fractions of the phases and the properties of the material can be expressed by the following mixture rule:

$$\sigma_c = \sigma_h V_h + \sigma(1 - V_h) \quad (1)$$

σ_c : Hardness of the composite
σ_h : Hardness of the reinforcement
σ_m : Hardness on the matrix phase
V_h : Volume fraction of the reinforcement

It have been reported that the hardness of graphite and Fe-35 at%Al are about 15 and 108 HRB, respectively

Table 1. Density of sintered composites after hot pressing.

Sample	Density (g/cm^3)	Relative density (%)
4 wt% graphite	5.11	97.3
8 wt% graphite	4.63	97.0
12 wt% graphite	4.21	96.8
16 wt% graphite	3.83	98.0
20 wt% graphite	3.47	97.6

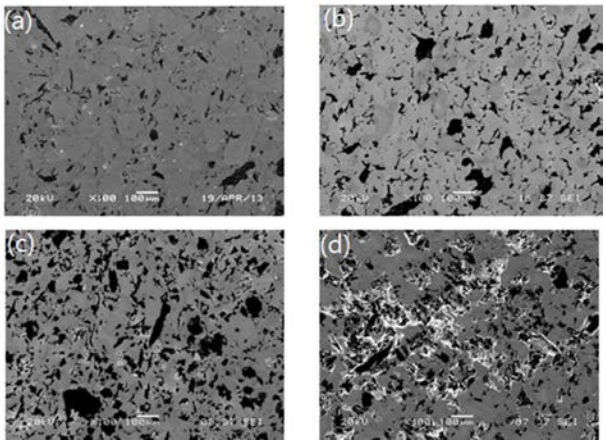

Fig. 2. Microstructures of sintered samples with various graphite contents: (a) 4wt%-graphite, (b) 8wt%-graphite, (c) 12wt%-graphite, (d) 20wt%-graphite composites.

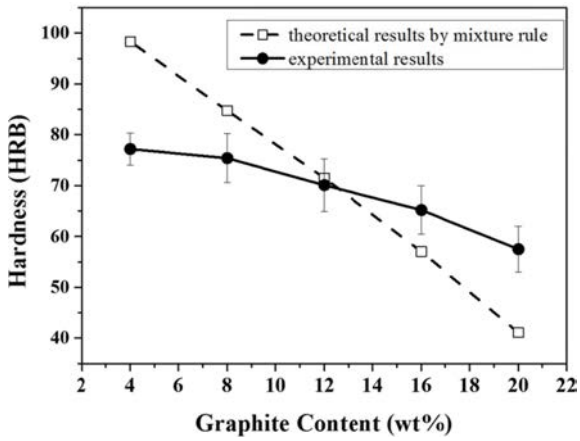

Fig. 3. Rockwell hardness results as a function of graphite content.

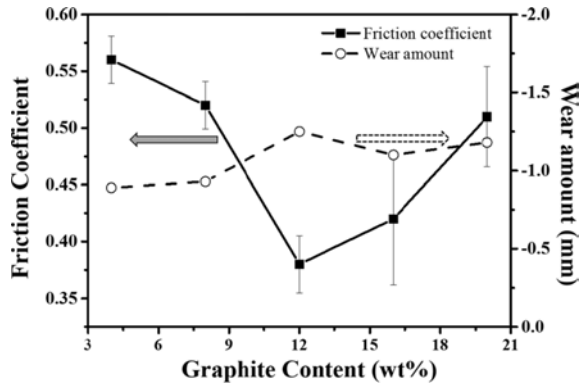

Fig. 4. Friction coefficient and wear amount of composites tested at 400 ºC for 4 h.

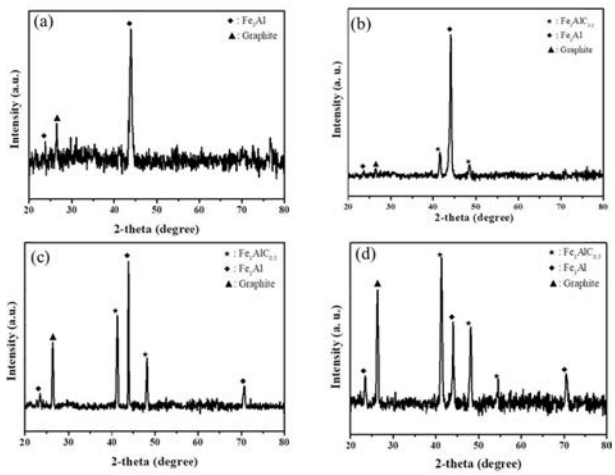

Fig. 5. XRD patterns of sintered samples before and after wear test. (a) polished surface of 8 wt% graphite composite before wear test (b) wear surface of 8 wt% graphite composites after wear test (c) polished surface 20 wt% graphite composite before wear test (d) wear surface of 20 wt% graphite composites after wear test.

[10-12]. Therefore, the theoretical hardness of the composites containing 4, 8, 12, 16 and 20 wt% graphite based on the mixture rule are 98, 85, 72, 57 and 41 HRB, respectively. The experimental results of hardness in the composites reduced linearly with increase of the graphite content, which was the same tendency as expected from the mixture rule. The theoretical hardness, however, decreases rapidly than the experimental hardness as the graphite content increases.

Fig. 4 shows the change of friction coefficient and wear amount as a function of the graphite content. Wear mechanisms of a material are classified into ultramild wear, mild wear, severe wear, and ultrasevere wear [13]. If the wear occurs in the condition of the lack of lubricant, severe wear by fracturing significantly affects wear properties. In the mild wear condition with excellent lubrication, however, the hardness of the material dominantly affects wear. While the hardness of the composites decreased as graphite content increased in Fig. 3, the friction coefficient decreased as the graphite content increases up to 12 wt% in Fig. 4. Since graphite has excellent lubrication properties, an increase of the graphite content in the composite lead to lower the friction coefficient regardless of the decrease of hardness. On the other hand, it is found that the friction coefficient of the composites with graphite contents higher than 12 wt% increases as the graphite content increases. In order to explain this phenomenon, XRD measurement of the composites before and after wear test was carried out.

Fig. 5 shows the XRD patterns of the composites with graphite contents of 8 wt% and 20 wt% before and after wear test. While the composite with 8 wt% graphite consisted of Fe_3Al and graphite phases before wear test, $Fe_3AlC_{0.5}$ as well as Fe_3Al and graphite was observed in the wear surface after wear test. On the other hand, the composite with 20 wt% graphite showed that the microstructure had Fe_3Al and graphite and $Fe_3AlC_{0.5}$ phases before wear test. After wear test, the peak intensity of $Fe_3AlC_{0.5}$ phase increased indicating that the amount of $Fe_3AlC_{0.5}$ phase increased. In the Fe-Al-C system, $Fe_3AlC_{0.5}$ phase can form during sintering [14] and the higher content of carbon in the system may lead easier formation of $Fe_3AlC_{0.5}$ phase. However, it was interesting that the formation of $Fe_3AlC_{0.5}$ phase in the composite with 8 wt% graphite occurred after wear test of high temperature. The temperature of wear test, 400 ºC, is not sufficient temperature to form $Fe_3AlC_{0.5}$ phase because the formation temperature of $Fe_3AlC_{0.5}$ phase in the Fe-Al-C system have been reported to be about 700 ºC [15]. It seemed that the temperature of wear surface rose enough higher to form $Fe_3AlC_{0.5}$ phase during the wear test. The load applied during the wear test could also assist the reaction between Fe_3Al and carbon. In addition, fresh surface of Fe_3Al matrix without oxidation layer, which was generated by the friction during the wear test, could accelerate the formation of $Fe_3AlC_{0.5}$ phase [16].

$Fe_3AlC_{0.5}$ phase has a perovskite structure, which exhibits significantly high brittleness and high strength. Therefore, the higher amount of $Fe_3AlC_{0.5}$ phase in the composite can lead the increase of hardness. From Fig. 3, the higher hardness of experimental values than theoretical values in the composites with higher graphite content may due to the increase of amount of $Fe_3AlC_{0.5}$ phase. However, the brittleness of $Fe_3AlC_{0.5}$ can cause the fracture of the phase during wear test, and then the fracture of brittle particles may lead a bad influence on the friction properties, such as increase of the friction coefficient. It seemed that the increase of the friction coefficient in the composites with graphite contents higher than 12% was due to the increase of $Fe_3AlC_{0.5}$ amount in Fig. 4.

Fig. 6 shows the morphology of wear surface of the composites with graphite contents of 8, 12 and 20 wt% after wear test. As shown in Fig. 5(a), the wear surface of the composite with 8 wt% graphite was severely

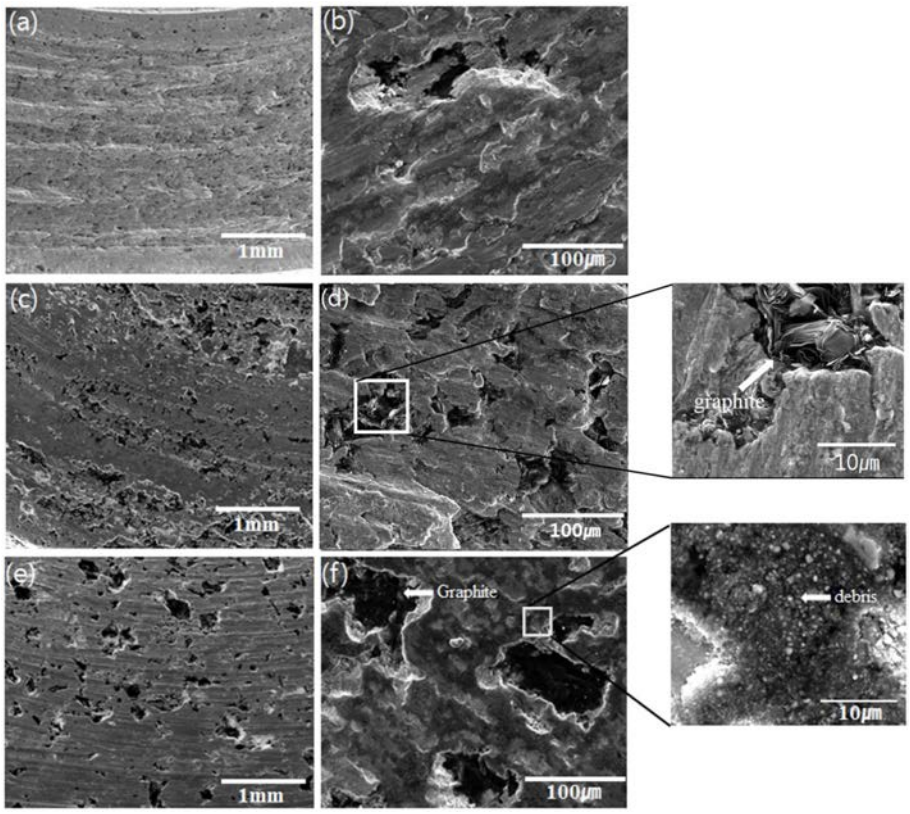

Fig. 6. Surface morphology of composites after wear test. (a) and (b) 8 wt% graphite composite, (c) and (d) 12 wt% graphite composite, (e) and (f) 20 wt% graphite composite.

deformed by friction of wear test. Compared to the microstructure before wear test as shown in Fig. 2(b), the place of graphite particles were covered with matrix by deformation of shearing. The wear surface of the composite with 12 wt% graphite also displayed the some deformation of matrix. As seen in Fig. 6(b), however, some exposed area of graphite particles can be observed all over the surface. On the other hands, the composite with 20 wt% graphite showed the wear surface of undeformed morphology after wear test. It seemed that hollow surface formed due to the fracture of graphite during the wear test, as shown in Fig. 6(c). In the case of the composite with 20 wt% graphite, some debris were observed in the wear surface. The compositional analysis of the wear debris area by SEM-EDS indicated that the particles were composed of $Fe_3AlC_{0.5}$.

With increase in graphite content, the friction coefficient may decrease. However, if matrix phase covered the graphite particles during wear test, graphite could not play a role of lubricant. Also, if the graphite particles were eliminated due to the fracture, the friction coefficient may increase. Higher friction coefficient of the composite with the graphite contents of 4, 8 and 20 wt% in Fig. 4 may be related to covering and fracture of graphite particles. Hence, graphite functioned as a suitable lubricant and improved the wear properties of graphite-Fe_3Al composites when added in optimum amounts. When the graphite content was excessive, the sliding wear properties degraded due to its reaction with the matrix phase.

Conclusions

Graphite- Fe_3Al composites were manufactured by mechanical alloying, mixing and hot pressing processes. Wear properties at high temperature of the composites were investigated for their applications in sintered bearings to be used under high temperature and load conditions. The results of this are summarized as follows.

The microstructure of composites shows that the graphite particles homogeneously distributed in the Fe_3Al matrix up to graphite content of 20 wt%. The hardness of the composites reduced linearly with increase of the graphite content. The hardness differs from the theoretical hardness calculated from mixture rule, which can be explained by $Fe_3AlC_{0.5}$ phase formed during sintering in the composites with the higher graphite content. While the fraction coefficient of the composites decreases as the graphite content increased up to 12 wt%, the composites with graphite contents higher than 12 wt% shows the increase of the friction coefficient with increase of graphite content. It

seems that the increase of the friction coefficient is due to the existence of $Fe_3AlC_{0.5}$ phase and the fracturing of the graphite particles. It is found that $Fe_3AlC_{0.5}$ phase is formed in the wear surface by reaction of graphite and Fe_3Al during wear test of 400 ^oC.

References

1. Y. S. Kim and Y.H. Kim, Mat. Sci. & Engin. A. 258 (1998) 319-324.
2. Y. I. Kim, G. S. An, Wonsik Lee, J. M. Jang, B. G. Park, Y. G. Jung, S. C. Choi, S. H. Ko, Cer. Inter. 43 (2017) 5907-5913.
3. D. L. Josh, D. S. Easton, C. T. Liu, S. S. Babu, S. A. David, intermetallics. 3 (1995) 467-481.
4. P.J.Bryant, P.L.Gutshall, L.H.Taylor, Wear 1 (1964) 118-126.
5. S. Dhanasekaran and R. Gnanamoorthy, Mat. & Design. 28 (2007) 1135-1141.
6. S. Dhanasekaran and R. Gnanamoorthy, Wear. 262 (2007) 617-623.
7. N. Veloff, A. Nadkarni and T. Murphy, Mel. Pow. Pep. 61 (2006) 31-41.
8. J. G. Justino, P. A. N. Bernardini, Mat. Sci. For. 299-300 (1998) 356- 363.
9. R. Raman, L. Vinod Babu, Wear. 95 (1984) 263-269.
10. G. Rosas, R. Esparza, A. Bedolla-Jacuinde, J. Mater. Eng. Perform. (2009) 57-61.
11. A. Senouci, J. Frene, H. Zaidi, Wear. (1999) 949-953.
12. M. S. Kim, S. I. Go, J. M. Kim, Y. J. Park, H. N. Kim, J. W. Ko, S. H. Jung, J. Y Kim, J. D. Yun, J. Korean Ceram. Soc. 54 (2017) 285-291.
13. S. M Hsu, M. C. Shen, A. W. Ruff, Tri. Int. 30 (1997) 377- 383.
14. D. Connetable, P. Maugis, Intermetallics. 16 (2008) 345- 352.
15. Anh Thu Phan, Min-Kyu Paek, Youn-B.zae Kang, Acta Mater. 79 (2014) 1-15.
16. V. Shankar Rao, Intermetallics. 11 (2003) 713-719.
17. Yonghai Kang, Junying Hao, Zhuhui Qiao, Licai Fu, Weimin Liu, Jun Yang, Int. J. Mater. Res. 105 (2014) 999-1003.